Zero Motocycles

SR-F 2020 Exploded Views

ZEV0065 - Suspension - Front

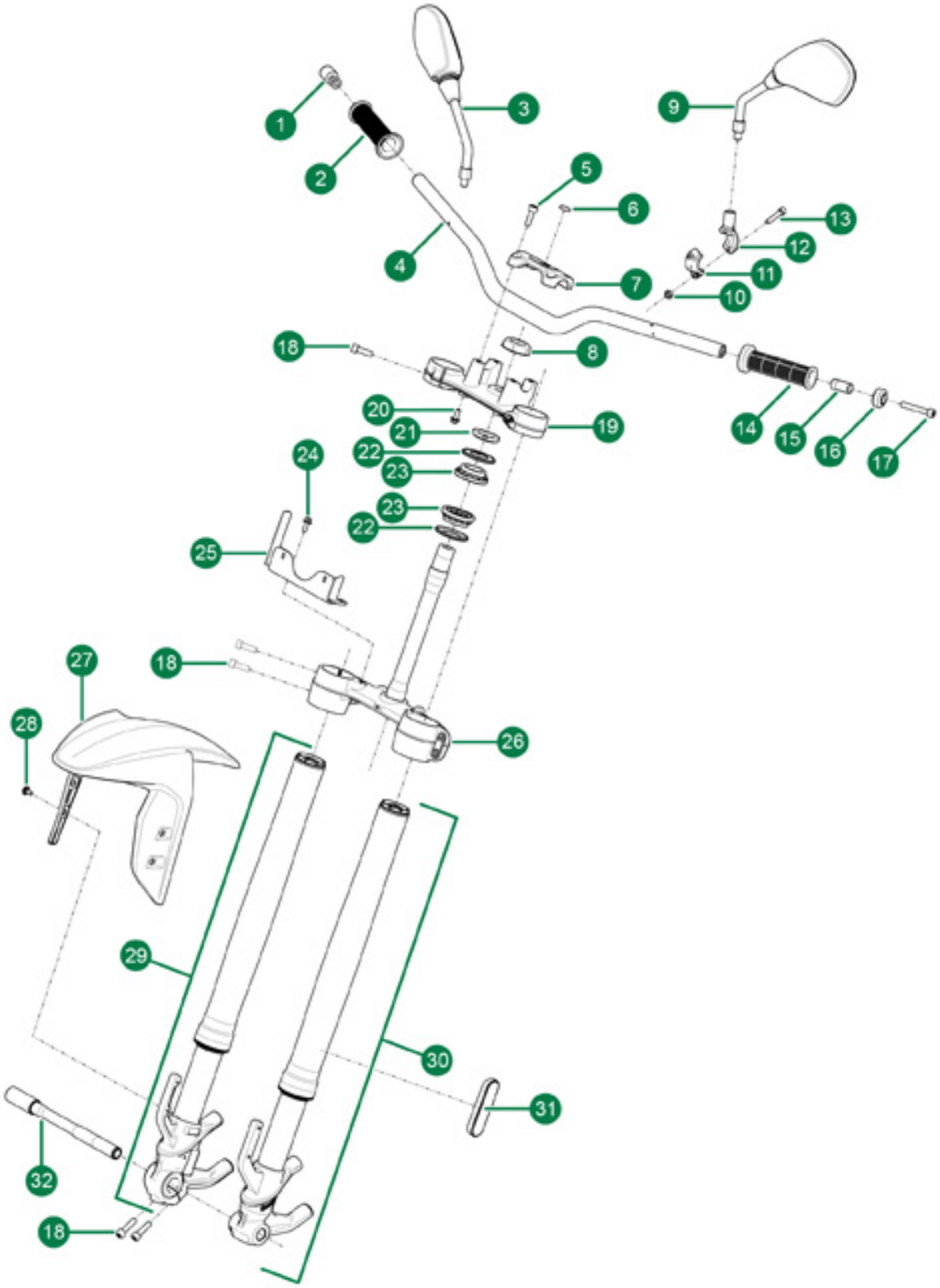

ZEV0065 - Suspension - Front

Callout	Part Number	Part Name	Qty. per Motorcycle
1	27-08002	HANDLEBAR END CAP NOTE: Standard motorcycles only.	2
2	27-08072	BITRON THROTTLE W/ HEATED GRIP NOTE: Premium motorcycles only.	1
2	27-08082	HAND GRIP THROTTLE SIDE NOTE: Grip does not have Zero logo. Order with 27-08083 if you want a matching pair. NOTE: Standard motorcycles only. NOTE: Supersedes p/n 27-08006.	1
3	27-08057	MIRROR RH	1
4	27-08152	HANDLEBAR	1
5	90-08166	STAR DRIVE SOCKET HEAD CAP SCREW ISO 14579 M8X25 8.8 ZM-F-21 ZM-L-02	9
6	80-08114	HANDLEBAR CLAMP BADGE	1
7	22-08086	HANDLEBAR CLAMP TOP	1
8	90-08222	CUSTOM STEERING STEM NUT M27 X 1.5 X 14MM COUNTERBORED FLANGE NOTE: does not require washer 20-06278	1
9	27-08056	MIRROR LH	1
10	90-02054	PREVAILING TORQUE TYPE NUT DIN 985 M6-08 ZM-F-01	6
11	27-08116	MIRROR LH MOUNT MATING CLAMP	1
12	27-08113	MIRROR LH MOUNT RAISED	1
13	90-03251	HEXAGON SOCKET HEAD CAP SCREW ISO 4762 M6X30-8.8 ZM-F-01	2
14	27-08073	BITRON HEATED HAND GRIP LEFT NOTE: Premium motorcycles only.	1
14	27-08083	HAND GRIP NON-THROTTLE SIDE NOTE: Grip does not have Zero logo. Order with 27-08082 if you want a matching pair. NOTE: Standard motorcycles only. NOTE: Supersedes p/n 27-08007.	1
15	90-08270	CYCRA M8 EXPANSION BOLT SYSTEM NOTE: Premium motorcycles only.	1
16	27-08155-2	Option #1: ALUMINUM BAR END SILVER NOTE: Premium motorcycles only.	2
17	90-08158	STAR DRIVE SOCKET HEAD CAP SCREW ISO 14579 M8X50 8.8 ZM-F-01 NOTE: Premium motorcycles only.	2
18	90-08166	STAR DRIVE SOCKET HEAD CAP SCREW ISO 14579 M8X25 8.8 ZM-F-21 ZM-L-02	9

19	22-08104	UPPER TRIPLE CLAMP	1
20	90-08124	HEX FLANGE BOLT STAR DRIVE PER ZM 88-08813 M6X16 8.8 ZM-F-01 ZM-L-02	3
21	22-06257	STEERING STEM LOCK NUT M 30 X1.5 MM	1
22	81-08045	BEARING LIP SEAL OVERMOLDED 55MM OD NOTE: replaces part# 20-06113	2
23	20-06068	STEERING HEAD BEARING KOYO SAC3055-1	2
24	90-08124	HEX FLANGE BOLT STAR DRIVE PER ZM 88-08813 M6X16 8.8 ZM-F-01 ZM-L-02	3
25	26-08327	HEADLIGHT SUPPORT BRACKET	1
26	22-08122	LOWER TRIPLE CLAMP ASSEMBLY WITH BEARINGS	1
27	24-08350-30 24-08350-31	Option #1: FRONT FENDER BOARDWALK RED Option #2: FRONT FENDER SEABRIGHT BLUE	1 1
28	90-08157	SHOULDER BOLT STAR DRIVE CUSTOM M5X12 ZM-F-11	22
29	22-08083	43MM BIG PISTON FORK RIGHT	1
30	22-08084	43MM BIG PISTON FORK LEFT	1
31	20-03128	REFLECTOR OVAL ADH BACK FORK MOUNT AMBER	2
32	23-08101	AXLE FRONT	1

ZEV0066 - Suspension - Rear

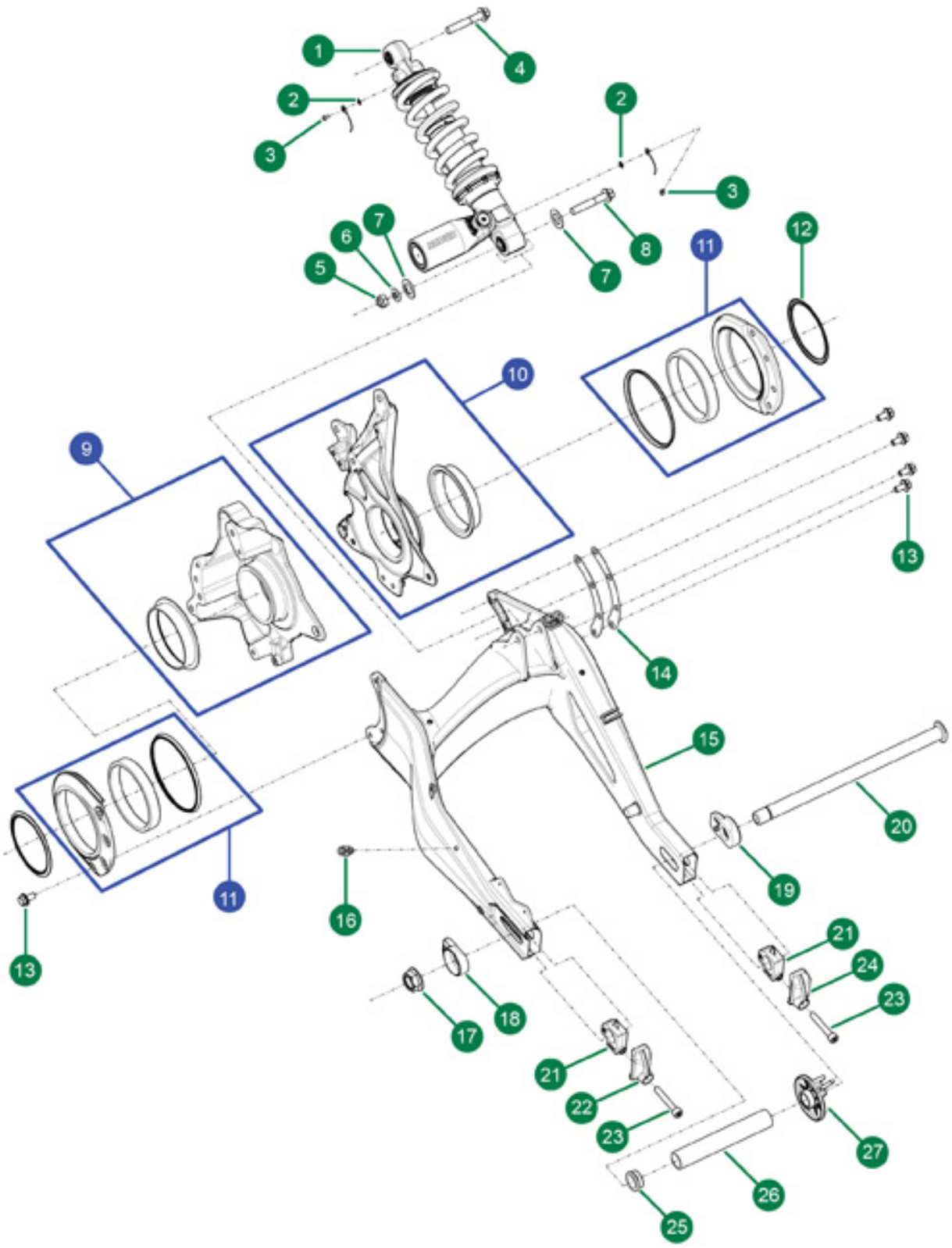

ZEV0066 - Suspension - Rear

Callout	Part Number	Part Name	Qty. per Motorcycle
1	22-08085	40MM REAR SHOCK	1
2	90-07389	TOOTHED LOCK WASHER WITH EXTERNAL TEETH DIN 6797 A M5 ZM-F-01	4
3	90-08170	STAR DRIVE BUTTON HEAD CAP SCREW ISO 7380 M4X8 8.8 ZM-F-01 ZM-L-02	7
4	90-08142	HEX FLANGE BOLT STAR DRIVE PER ZM 88-08813 M10X60 8.8 ZM-F-01 ZM-L-02	1
5	90-02050	PREVAILING TORQUE TYPE NUT DIN 985 M10-08 ZM-F-01	1
6	90-02100	WASHER ISO 7089 10-200 HV ZM-F-01	1
7	90-08033	WASHER 17.5 - 30.0 X 1.25 PLASTIC	2
8	90-08142	HEX FLANGE BOLT STAR DRIVE PER ZM 88-08813 M10X60 8.8 ZM-F-01 ZM-L-02	1
9	26-08471	LEFT SIDE DOUBLER ASSY	1
10	26-08472	RIGHT SIDE DOUBLER ASSY	1
11	26-08473	SWINGARM BEARING CAP ASSY"	1
12	26-08263	SWINGARM BEARING DUST COVER OUTER	2
13	90-08257	HEXAGON FLANGE BOLT DIN 6921 M8X16 10.9 ZM-F-01 ZM-L-02	8
14	12-08106	SWINGARM JOINT SHIM SERVICE KIT	1
15	26-08400	SWINGARM ASSEMBLY STEEL SHEET	1
16	90-08252	ROUTING CLIP 0.25IN HOLE 0.25IN CABLE	1
17	90-05678	U-NUT M20X1.5 FLANGE 27S 15H NOTE: Rear Axle Nut	1
18	26-08248	REAR AXLE ADJUSTER NUT SIDE	1
19	26-08246	REAR AXLE ADJUSTER HEAD SIDE	1
20	23-08102	AXLE REAR	1
21	26-08305	REAR AXLE ADJUSTER INTERNAL	2
22	26-08247	SWINGARM END CAP LEFT	1
23	90-08158	STAR DRIVE SOCKET HEAD CAP SCREW ISO 14579 M8X50 8.8 ZM-F-01	2
24	26-08202	SWINGARM END CAP RIGHT	1
25	23-07489	WHEEL SPACER DRIVE SIDE REAR	1
26	23-08116	BEARING SPACER TUBE 5.50 X 17 REAR CAST WHEEL	2
27	45-07496	MPI WHEEL SPEED SENSOR	2

ZEV0067 - Axles, Wheels & Tires

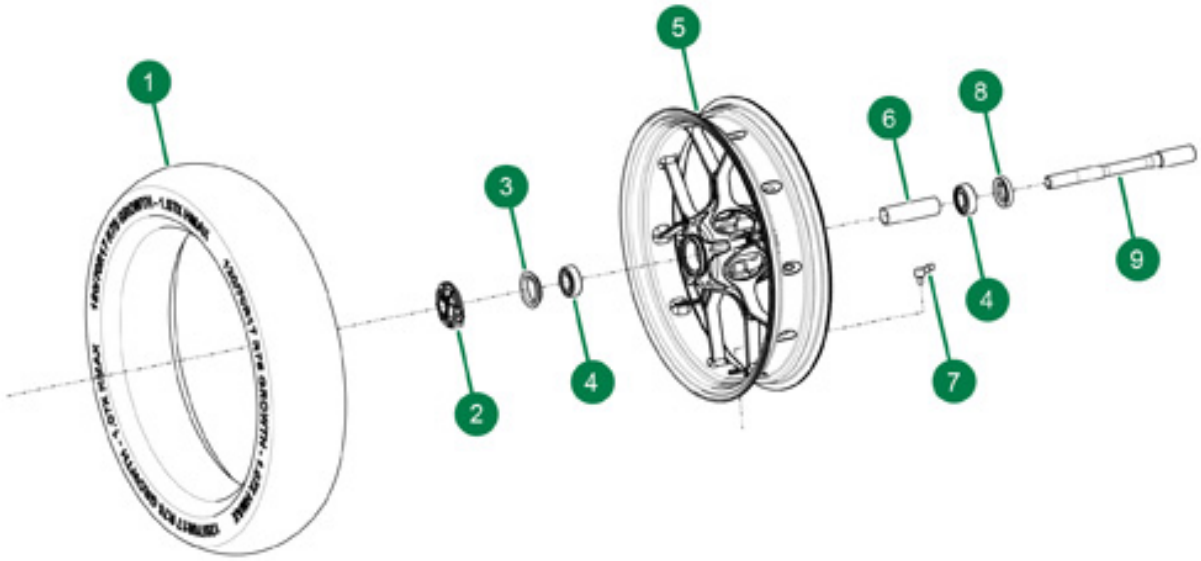

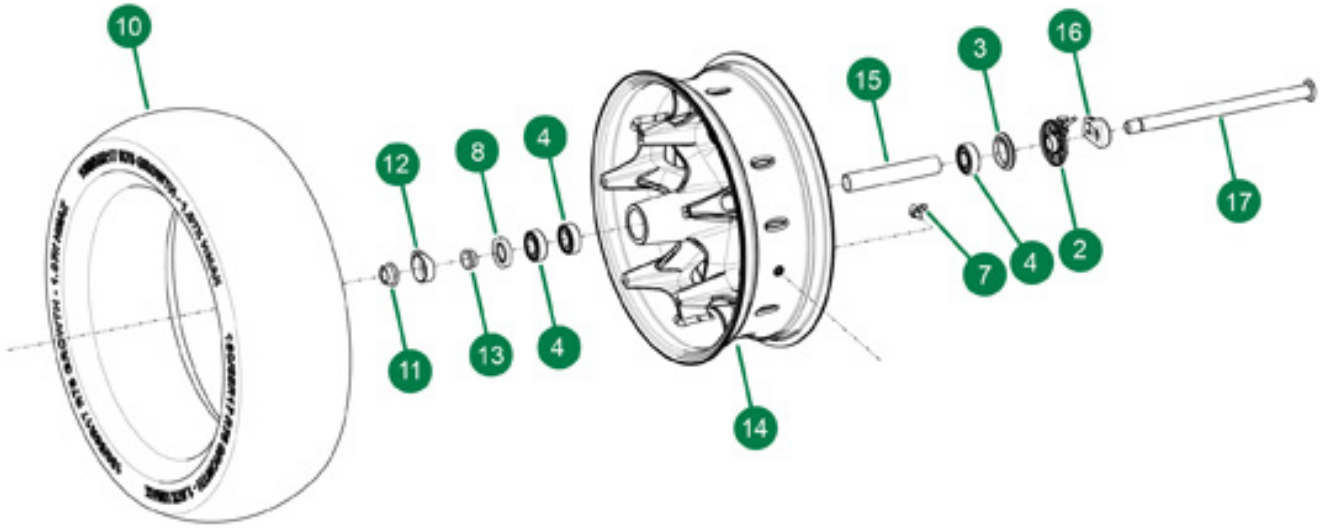

ZEV0067 - Axles, Wheels & Tires

Callout	Part Number	Part Name	Qty. per Motorcycle
1	23-08118	TIRE FRONT PIRELLI DIABLO ROSSO III 120/70 ZR17	1
2	45-07496	MPI WHEEL SPEED SENSOR	2
3	25-08080	ABS MAGNET RING	1
4	20-06138	BEARING 6204 NOTE: Bearing used as swing arm bearing in some models and as the wheel bearing (qty of 5; 2 in front and three in rear wheel) in 2015 and later models. NOTE: Manufacturer part number is 6204-2RS	5
5	23-08127-1	Option #1: 3.50 X 17 FRONT CAST WHEEL ASSEMBLY BRONZE EFFECT	1
6	23-08109	BEARING SPACER TUBE 3.50 X 17 FRONT CAST WHEEL	1
7	23-08141	90 DEGREE VALVE STEM BLACK	2
8	23-08062	BEARING DUST SEAL, 25 X 47 X 7	1
9	23-08101	AXLE FRONT	1
10	23-08117	TIRE REAR PIRELLI DIABLO ROSSO III 180/55 ZR17	1
11	90-05678	U-NUT M20X1.5 FLANGE 27S 15H NOTE: Rear Axle Nut	1
12	26-08248	REAR AXLE ADJUSTER NUT SIDE	1
13	23-07489	WHEEL SPACER DRIVE SIDE REAR	1
14	23-08097-1	Option #1: 5.50 X 17 REAR CAST WHEEL ASSEMBLY BRONZE EFFECT	1
15	23-08116	BEARING SPACER TUBE 5.50 X 17 REAR CAST WHEEL	2
16	26-08246	REAR AXLE ADJUSTER HEAD SIDE	1
17	23-08102	AXLE REAR	1

ZEV0068 - Body

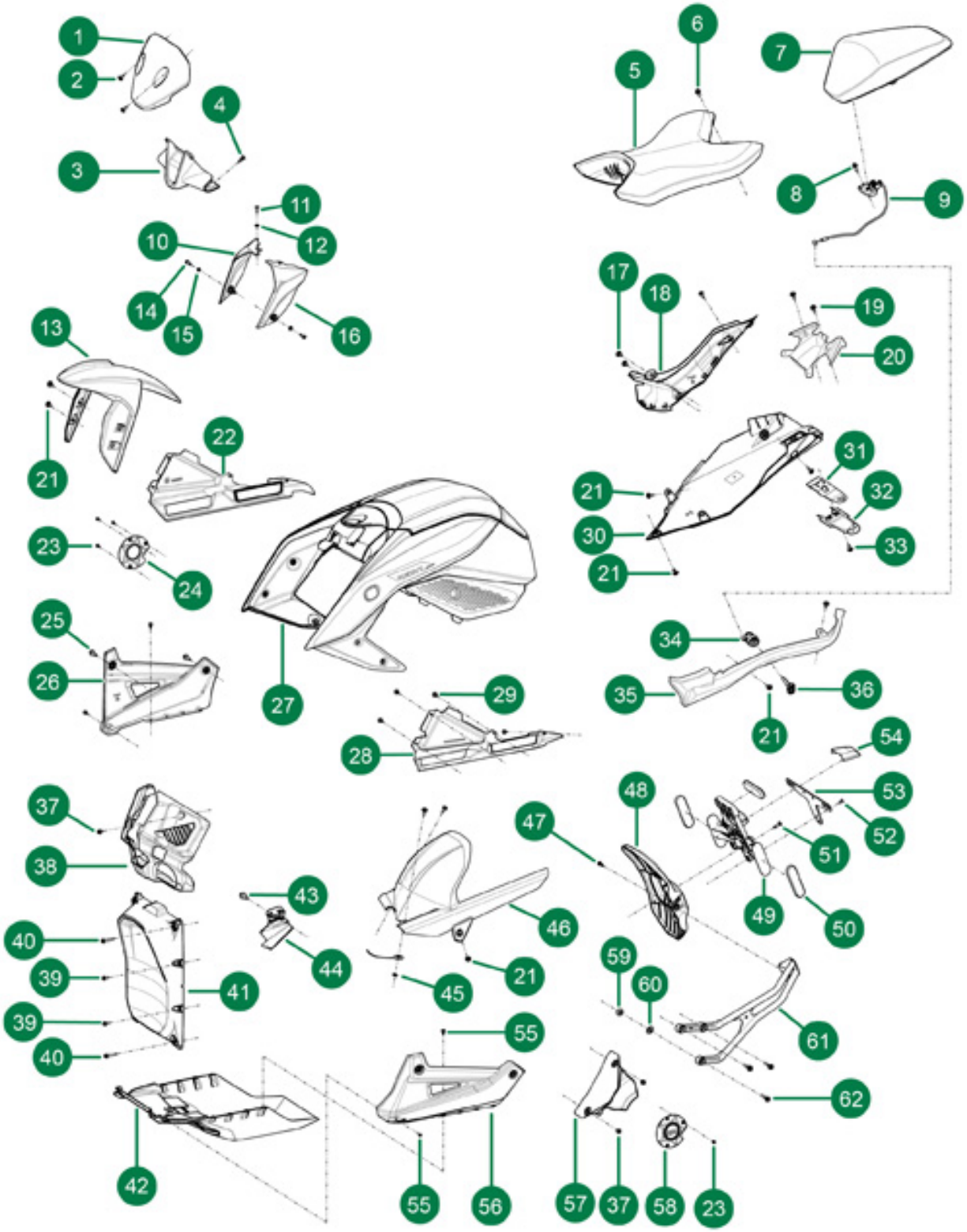

ZEV0068 - Body

Callout	Part Number	Part Name	Qty. per Motorcycle
1	24-08366	FLYSCREEN NOTE: Premium motorcycles only.	1
2	90-08157	SHOULDER BOLT STAR DRIVE CUSTOM M5X12 ZM-F-11	22
3	24-08395	DASH COVER	1
4	20-03066	RIVET PUSH PUSH NYLON M6	2
5	27-08194	RIDER SEAT MEDIUM ASSEMBLY WITH FILL GAP	1
6	90-08295	HEX FLANGE BOLT STAR DRIVE PER ZM 88-08813 M6X12 8.8 ZM-F-11 ZM-L-02	7
7	27-08067	PASSENGER SEAT ASSEMBLY	1
8	90-08164	HEX FLANGE BOLT STAR DRIVE PER ZM 88-08813 M6X20 10.9 ZM-F-01 ZM-L-02	6
9	27-08132	SEAT CLOSURE LATCH WITH CABLE ASSEMBLY	1
10	24-08507	HEADLIGHT WING RH	1
11	90-08100	HEXAGON SOCKET HEAD CAP SCREW ISO 4762 M5X25-8.8 ZM-F-01	2
12	90-02101	WASHER ISO 7089 5-200HV ZM-F-01	9
13	24-08350-30 24-08350-31	Option #1: FRONT FENDER BOARDWALK RED Option #2: FRONT FENDER SEABRIGHT BLUE	1 1
14	90-08100	HEXAGON SOCKET HEAD CAP SCREW ISO 4762 M5X25-8.8 ZM-F-01	2
15	90-02101	WASHER ISO 7089 5-200HV ZM-F-01	9
16	24-08506	HEADLIGHT WING LH	1
17	90-08157	SHOULDER BOLT STAR DRIVE CUSTOM M5X12 ZM-F-11	22
18	24-08505	SIDE COVER RH	1
19	90-08157	SHOULDER BOLT STAR DRIVE CUSTOM M5X12 ZM-F-11	22
20	24-08362	SEAT TRAY	1
21	90-08157	SHOULDER BOLT STAR DRIVE CUSTOM M5X12 ZM-F-11	22
22	24-08515	CHARGER COVER RIGHT	1
23	90-08170	STAR DRIVE BUTTON HEAD CAP SCREW ISO 7380 M4X8 8.8 ZM-F-01 ZM-L-02	7
24	24-08419	REARSET DUST COVER LEFT	1
25	90-08164	HEX FLANGE BOLT STAR DRIVE PER ZM 88-08813 M6X20 10.9 ZM-F-01 ZM-L-02	6
26	24-08445	LOWER BODYWORK RH	1
27	24-08546-30 24-08546-31	Option #1: SR/F TANK BOARDWALK RED Option #2: SR/F TANK SEABRIGHT BLUE	1 1
28	24-08516	CHARGER COVER LEFT	1
29	90-08055	RIVET/TREE FASTENER 5MM OD PUSH SCREW TYPE	8
30	24-08427	TAIL TRUNK PAN	1
31	26-08341	TURN SIGNAL BRACKET	1

32	24-08435	TURN SIGNAL HOLDER REAR	1
33	90-08157	SHOULDER BOLT STAR DRIVE CUSTOM M5X12 ZM-F-11	22
34	27-08133	ZADI IMMOBILIZER MAIN SWITCH KEYED LOCKS AND OVERMOLDED KEYS SET	1
35	24-08438	SIDE COVER LH	1
36	27-08205	FST BLANK KEY	2
37	90-08209	HEX FLANGE BOLT STAR DRIVE PER ZM 88-08813 M5X8 8.8 ZM-F-01 ZM-L-02	7
38	24-08388	HCU COVER	1
39	90-08280	HEX FLANGE BOLT STAR DRIVE PER ZM 88-08813 M5X10 8.8 ZM-F-01 ZM-L-02	16
40	90-08174	HEX FLANGE BOLT STAR DRIVE PER ZM 88-08813 M5X30 8.8 ZM-F-01 ZM-L-02	6
41	46-08241	BATTERY CASE FRONT	1
42	24-08447	LOWER BODYWORK CENTER SKIDPLATE	1
43	90-08125	HEX FLANGE BOLT STAR DRIVE PER ZM 88-08813 M8X20 10.9 ZM-F-01 ZM-L-02	7
44	24-08549	PHASE LEAD COVER	1
45	90-07389	TOOTHED LOCK WASHER WITH EXTERNAL TEETH DIN 6797 A M5 ZM-F-01	4
46	24-08361	REAR INNER FENDER	1
47	90-08093	HEXAGON SOCKET HEAD CAP SCREW ISO 4762 M4X6-8.8 ZM-F-01 ZM-L-02	2
48	24-08531	REAR OUTER FENDER	1
49	24-08528	LICENSE PLATE HOLDER HORIZONTAL REFLECTOR	1
50	20-03487	REFLECTOR, OVAL, ADH BACK, RED ECIE	3
51	90-08163	STAR DRIVE BUTTON HEAD SCREW M5X20-8.8, ISO 7380, ISO 10664, ZM-F-01 REV 03 ZM-L-02	1
52	90-08215	STAR DRIVE SOCKET COUNTERSUNK HEAD SCREW ANSI B 18.6.7M ISO 14582 M5X10-8.8 ZM-F-01 ZM-L-02	3
53	26-08363	LICENSE PLATE BRACKET EU SHORT	1
54	24-08413	LICENSE PLATE LIGHT HOOD	1
55	90-05887	PHILIPS HEAD SHEET METAL SCREW TYPE AB NO 10 X 1/2 STEEL ZM-F-11	10
56	24-08446	LOWER BODYWORK LH	1
57	24-08517	DOUBLER COVER	1
58	24-08420	REARSET DUST COVER RIGHT	1
59	90-03236	PREVAILING TORQUE TYPE NUT DIN 985 M8-10 ZM-F-01	3
60	90-02104	WASHER ISO 7089 -8-200 HV ZM-F-01	8
61	26-08379	REAR OUTER FENDER ARM STEEL	1
62	90-08166	STAR DRIVE SOCKET HEAD CAP SCREW ISO 14579 M8X25 8.8 ZM-F-21 ZM-L-02	9

ZEV0069 - Body - Tank

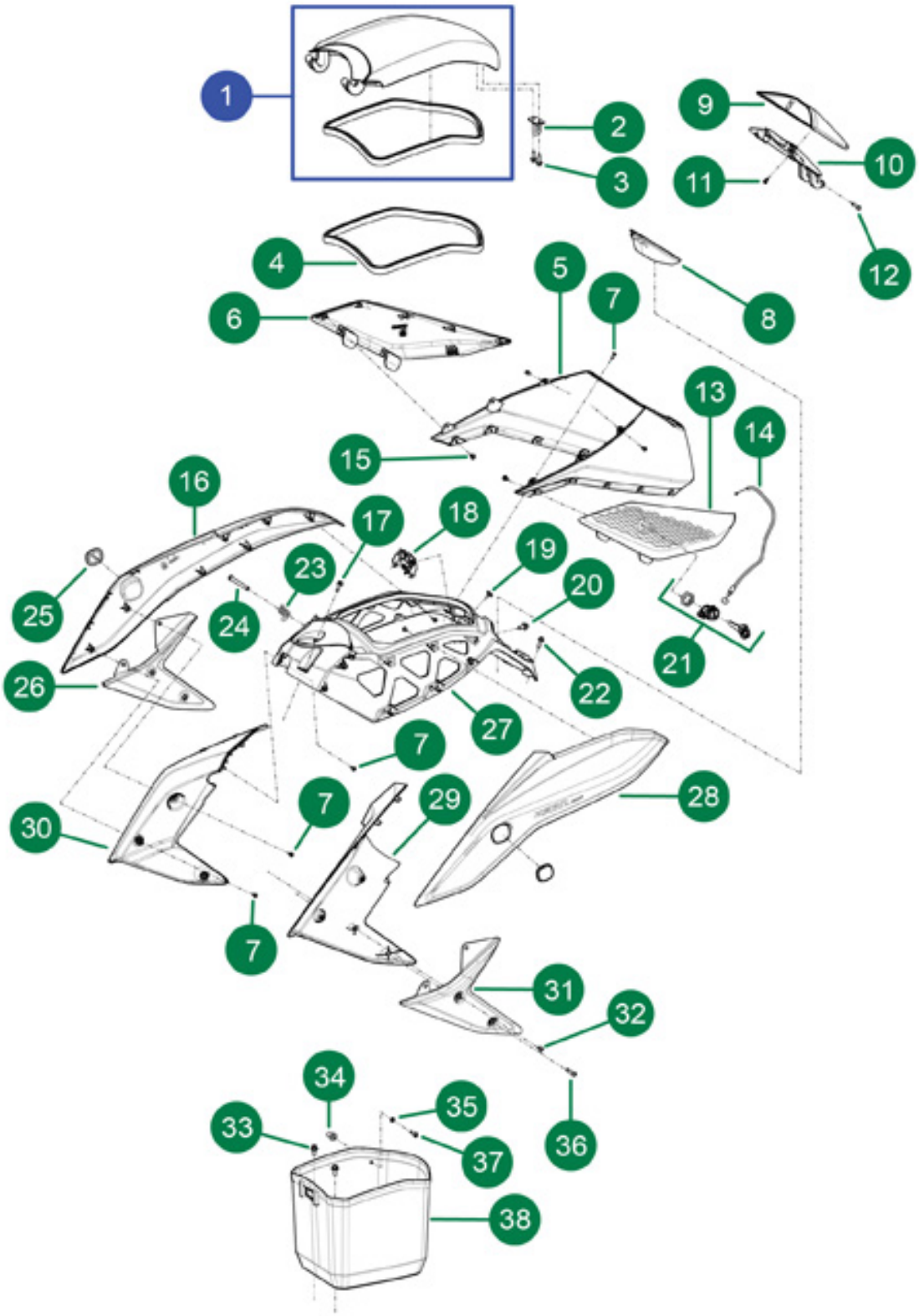

ZEV0069 - Body - Tank

Callout	Part Number	Part Name	Qty. per Motorcycle
1	24-08597-30	Option #1: TANK TRUNK LID ASSEMBLY BOARDWALK RED	1
	24-08597-31	Option #2: TANK TRUNK LID ASSEMBLY SEABRIGHT BLUE	1
	24-08597-38	Option #3: TANK TRUNK LID ASSEMBLY SKYLINE SILVER EFFECT	1
	24-08597-39	Option #4: TANK TRUNK LID ASSEMBLY CERULEAN BLUE EFFECT	1
2	24-08386	TANK TRUNK LATCH LOOP	1
3	90-08183	HEX FLANGE BOLT STAR DRIVE PER ZM 88-08813 M5X16 8.8 ZM-F-01 ZM-L-02	15
4	24-08382	TANK TRUNK LID WEATHERSTRIP	950
5	24-08365-30	Option #1: TANK REAR BOARDWALK RED	1
	24-08365-31	Option #2: TANK REAR SEABRIGHT BLUE	1
	24-08365-38	Option #3: TANK REAR SKYLINE SILVER EFFECT	1
	24-08365-39	Option #4: TANK REAR CERULEAN BLUE EFFECT	1
6	24-08429	KNEE GRIP RIGHT	1
7	90-05886	PHILIPS HEAD SHEET METAL SCREW TYPE AB NO 8 X 1/2 STEEL ZM-F-11	21
8	24-08520	CHARGE INLET GASKET IEC 62196 TE EURO	1
8	24-08522	CHARGE INLET GASKET BIZLINK J1772 60A	1
9	24-08509-30	Option #1: CHARGE INLET LID OUTER BOARDWALK RED	1
	24-08509-31	Option #2: CHARGE INLET LID OUTER SEABRIGHT BLUE	1
	24-08509-38	Option #3: CHARGE INLET LID SKYLINE SILVER EFFECT	1
	24-08509-39	Option #4: CHARGE INLET LID CERULEAN BLUE EFFECT	1
10	24-08355	CHARGE INLET LID INNER	1
11	90-08269	PAN HEAD PT THREAD-FORMING SCREW STAR DRIVE A2 STAINLESS K40 4X8MM	9
12	90-08266	3/16 X 0.88 CLEVIS PIN SLIC ZINC PLATED STEEL	2
13	24-08430	KNEE GRIP LEFT	1
14	27-08157	BOWDEN CABLE 330MM FROM STOP TO STOP WITHOUT SPRING 27MM CABLE STICK OUT	1
15	90-05887	PHILIPS HEAD SHEET METAL SCREW TYPE AB NO 10 X 1/2 STEEL ZM-F-11	10
16	24-08431-30	Option #1: TANK ARM OUTER RIGHT BOARDWALK RED	1
	24-08431-31	Option #2: TANK ARM OUTER RIGHT SEABRIGHT BLUE	1
17	90-08183	HEX FLANGE BOLT STAR DRIVE PER ZM 88-08813 M5X16 8.8 ZM-F-01 ZM-L-02	15
18	27-08102	CLOSURE LATCH WIRE IN SLOT STYLE RIGHT HAND CABLE ROUTING	1
19	90-08245	DISC MAGNET 1/2" DIAMETER 1/4" THICK BLACK NICKEL PLATED	2

20	90-08184	HEX FLANGE BOLT STAR DRIVE PER ZM 88-08813 M6X12 8.8 ZM-F-01 ZM-L-02	6
21	27-08133	ZADI IMMOBILIZER MAIN SWITCH KEYED LOCKS AND OVERMOLDED KEYS SET	1
22	90-08183	HEX FLANGE BOLT STAR DRIVE PER ZM 88-08813 M5X16 8.8 ZM-F-01 ZM-L-02	15
23	90-08284	TORSION SPRING TANK TRUNK LID RIGHT D2.3MM	1
23	90-08285	TORSION SPRING TANK TRUNK LID LEFT D2.3MM	1
24	90-08239	1/4 X 2 5/8 CLEVIS PIN SLIC ZINC PLATED STEEL	2
25	80-08089	TANK BADGE	2
26	24-08518	TANK ARM OUTER LOWER RH	1
27	24-08421	TANK COLLAR	1
28	24-08432-30 24-08432-31	Option #1: TANK ARM OUTER LEFT BOARDWALK RED Option #2: TANK ARM OUTER LEFT SEABRIGHT BLUE	1 1
29	24-08434	TANK ARM INNER LEFT	1
30	24-08433	TANK ARM INNER RIGHT	1
31	24-08519	TANK ARM OUTER LOWER LH	1
32	90-07272	HEXAGON SOCKET BUTTON HEAD CAP SCREW ISO 7380 M5X8-8.8 ZM-F-01 ZM-L-02	2
33	90-08184	HEX FLANGE BOLT STAR DRIVE PER ZM 88-08813 M6X12 8.8 ZM-F-01 ZM-L-02	6
34	90-03037	WELL NUT M5X0.8 GRIP 0.89-5.89	4
35	90-04085	WASHER M5 X 11 X 1 NYLON 6/6 BLACK	6
36	90-07272	HEXAGON SOCKET BUTTON HEAD CAP SCREW ISO 7380 M5X8-8.8 ZM-F-01 ZM-L-02	2
37	90-07256	HEXAGON SOCKET BUTTON HEAD CAP SCREW ISO 7380 M5X20-8.8 ZM-F-11	4
38	24-08514	TANK BUCKET STANDARD	1

ZEV0070 - Brakes

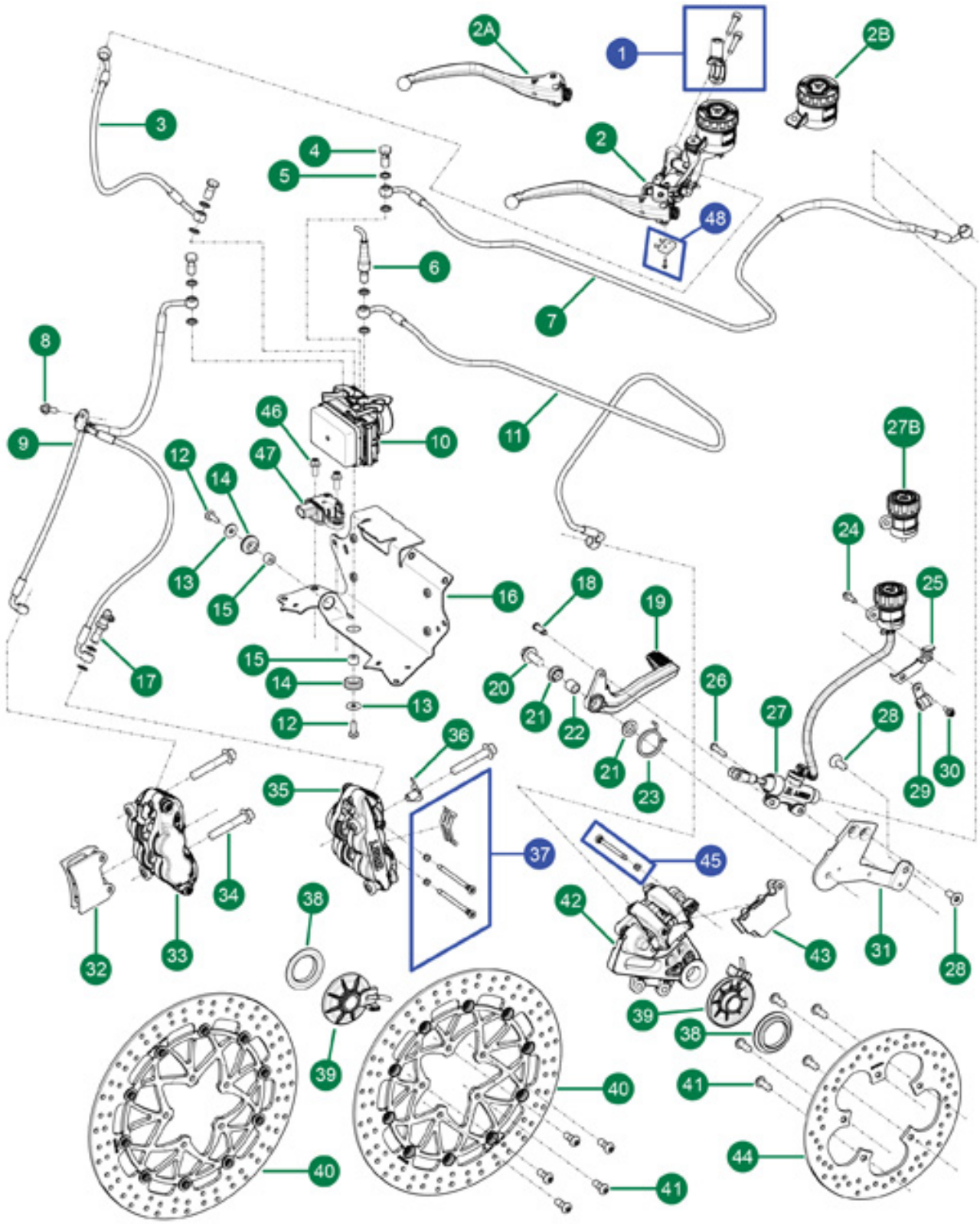

ZEV0070 - Brakes

Callout	Part Number	Part Name	Qty. per Motorcycle
1	25-08163	BAR CLAMP KIT FRONT RADIAL MASTER CYLINDER WITH MIRROR MOUNT	1
2	25-08113	FRONT RADIAL MASTER CYLINDER MIRROR	1
2	25-08160	BRAKE LEVER FRONT RADIAL MASTER CYLINDER	1
2	25-08162	RESERVOIR KIT FRONT RADIAL MASTER CYLINDER	1
3	25-08125	HOSE, BRAKE LINE MASTER CYLINDER FRONT	1
4	90-08014	M10X1.0 BANJO BOLT	6
5	90-03467	BANJO BOLT CRUSH WASHER M10	0
6	25-08138	REAR BRAKE LIGHT PRESSURE SWITCH M10X1.0	1
7	25-08126	HOSE, BRAKE LINE MASTER CYLINDER REAR	1
8	90-08124	HEX FLANGE BOLT STAR DRIVE PER ZM 88-08813 M6X16 8.8 ZM-F-01 ZM-L-02	3
9	25-08123	HOSE, BRAKE LINE CALIPERS FRONT	1
10	25-08152	BOSCH HCU 9.1MP MSC WET	1
11	25-08178	HOSE, REAR BRAKE CALIPER-HCU	1
12	90-08168	STAR DRIVE SOCKET PAN HEAD SCREW ISO 14583 M6X16 CLASS 8.8 ZM-F-01 ZM-L-01	2
13	90-02105	WASHER ISO 7093-1 6-200 HV ZM-F-01	3
14	90-08027	GROMMET VIBRATION ISOLATION M6	2
15	90-08026	SPACER M6 UNTHREADED	2
16	26-08265	MULTI MOUNT	1
17	25-08136	FRONT BANJO BLEED BOLT	2
18	90-08213	1/4X0.55 CLEVIS PIN SLIC STAINLESS STEEL	1
19	25-08174	BRAKE PEDAL 20MM DROP	1
20	90-08126	HEX FLANGE BOLT STAR DRIVE PER ZM 88-08813 M10X25 8.8 ZM-F-01 ZM-L-02	3
21	20-02465	IGLIDE BEARING GFM-1416-06	2
22	20-02455	X BRAKE PEDAL SPACER	1
23	90-08177	SPRING TORSION BRAKE PEDAL	1
24	90-08183	HEX FLANGE BOLT STAR DRIVE PER ZM 88-08813 M5X16 8.8 ZM-F-01 ZM-L-02	15
25	27-08108	REAR BRAKE RESERVOIR MOUNT BRACKET	1
26	90-08264	STAR DRIVE BUTTON HEAD SCREW M6X25-8.8, ISO 7380, ISO 10664, ZM-F-01 ZM-L-02	6
27	25-08147	JJUAN 11MM REAR MASTER CYLINDER LG RESERVOIR	1
27	25-08166	RESERVOIR KIT 11MM REAR MASTER CYLINDER	1
28	90-08133	6-LOBE SOCKET COUNTERSUNK HEAD SCREW ISO 14582 M8X20-10.9 ZM-F-01 ZM-L-02	3
29	25-08058	BRAKE LINE AND WSS WIRE LONG P-CLAMP	1
30	90-07369	HEXAGON SOCKET BUTTON HEAD CAP SCREW ISO 7380 M6X14-8.8 ZM-F-01 ZM-L-02 NOTE: Does not apply to DS	1

31	26-08318	REAR MASTER CYLINDER MOUNT BRACKET	1
32	25-08151	FRONT RADIAL BRAKE PAD SET SBS-SI-24HH	2
33	25-08112	FRONT RIGHT RADIAL BRAKE CALIPER ASSEMBLY	1
34	90-08134	HEX FLANGE BOLT STAR DRIVE PER ZM 88-08813 M10X55X1.25 THREAD 10.9 ZM-F-01 ZM-L-02	4
35	25-08111	FRONT LEFT RADIAL BRAKE CALIPER ASSEMBLY	1
36	25-08141	FRONT WSS WIRE CALIPER CLIP	1
37	25-08157	BRAKE PAD PIN KIT RADIAL FRONT CALIPER	2
38	25-08080	ABS MAGNET RING	1
39	45-07496	MPI WHEEL SPEED SENSOR	2
40	25-08155	FRONT 320MM CARRIER ASSEMBLY	2
41	90-08259	STAR DRIVE BUTTON HEAD SCREW M8X20-10.9, ISO 7380, ISO 10664, ZM-F-01 REV 03 ZM-L-02 REV 01	15
42	25-08148	JJUAN 34MM REAR CALIPER LOW FRICTION PADS	1
43	25-08149	REAR BRAKE PADS SET SBS-SI-80GG	1
44	25-08144	REAR BRAKE ROTOR 240MM 5 SPOKE	1
45	25-08050	JJUAN CALIPER PAD PIN SDS/XMX	1
46	90-08124	HEX FLANGE BOLT STAR DRIVE PER ZM 88-08813 M6X16 8.8 ZM-F-01 ZM-L-02	3
47	25-08120	BOSCH IMU MM7.10	1
48	25-08164	BRAKE LIGHT SWITCH FRONT RADIAL MASTER CYLINDER	1

ZEV0071 - Frame - Left

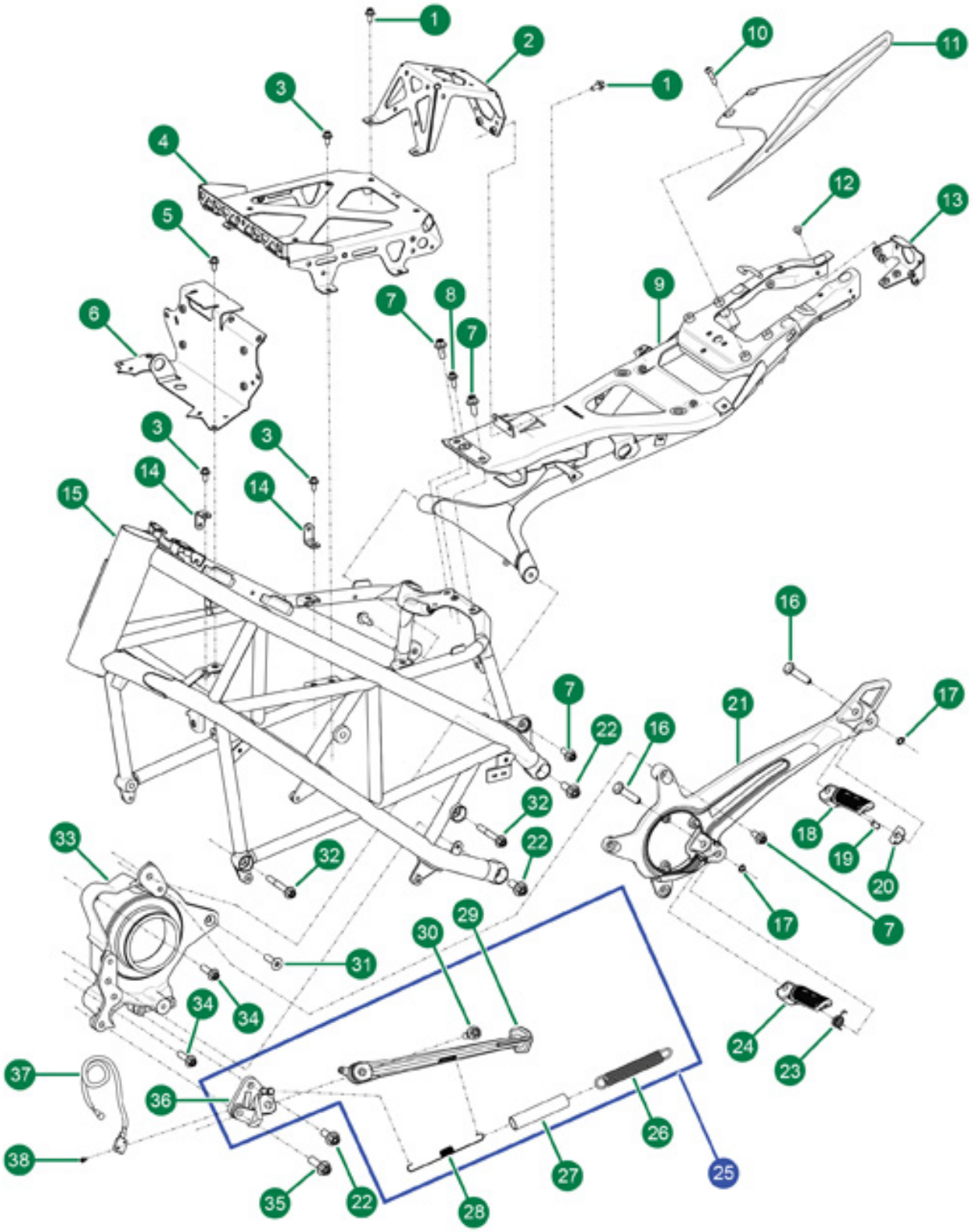

ZEV0071 - Frame - Left

Callout	Part Number	Part Name	Qty. per Motorcycle
1	90-08184	HEX FLANGE BOLT STAR DRIVE PER ZM 88-08813 M6X12 8.8 ZM-F-01 ZM-L-02	6
2	26-08352	CHARGE INLET MOUNT J1772 BIZLINK STEEL	1
2	26-08354	CHARGE INLET MOUNT IEC 62196 TE EURO STEEL	1
3	90-08184	HEX FLANGE BOLT STAR DRIVE PER ZM 88-08813 M6X12 8.8 ZM-F-01 ZM-L-02	6
4	26-08214	TANK SUPPORT	1
5	90-08184	HEX FLANGE BOLT STAR DRIVE PER ZM 88-08813 M6X12 8.8 ZM-F-01 ZM-L-02	6
6	26-08265	MULTI MOUNT	1
7	90-08125	HEX FLANGE BOLT STAR DRIVE PER ZM 88-08813 M8X20 10.9 ZM-F-01 ZM-L-02	7
8	90-08124	HEX FLANGE BOLT STAR DRIVE PER ZM 88-08813 M6X16 8.8 ZM-F-01 ZM-L-02	3
9	26-08282	TAIL FRAME ASSEMBLY	1
10	90-08264	STAR DRIVE BUTTON HEAD SCREW M6X25-8.8, ISO 7380, ISO 10664, ZM-F-01 ZM-L-02	6
11	27-08079	GRAB HANDLE LH	1
12	90-08123	HEX FLANGE BOLT STAR DRIVE PER ZM 88-08813 M5X12 8.8 ZM-F-01 ZM-L-02	9
13	26-08325	TAILLIGHT BRACKET	1
14	26-08317	MOUNT BRACKET	4
15	26-08373	MAIN FRAME NOTE: Motorcycle VIN#, Case#, or Claim# must be provided when ordering.	1
16	90-02725	CLEVIS PIN CUSTOM 10MM X 45L	4
17	90-02879	RETAINING RING 9MM SHAFT DIN 471	4
18	27-08039	PASSENGER FOOTPEG LEFT SIDE	1
19	20-05404	FOOTPEG DETENT BALL MECHANISM	2
20	20-04279	FOOTPEG DETENT PLATE	2
21	27-08112	REAR SET LEFT	1
22	90-08126	HEX FLANGE BOLT STAR DRIVE PER ZM 88-08813 M10X25 8.8 ZM-F-01 ZM-L-02	3
23	20-02727	TORSION SPRING, .678 OD .078 WIRE, CCW	2
24	27-08037	RIDER FOOTPEG LEFT SIDE STREET	1
25	26-08200	SIDESTAND ASSY	1

Part Detail for #25. SIDESTAND ASSY

Callout	Part Number	Part Name	Qty. per Motorcycle
26	90-08219	SIDESTAND SPRING OUTER STAINLESS PASSIVATED	1

27	26-08315	SIDESTAND SPRING SLEEVE	1
28	20-00709	S KS SPRING IN	1
29	26-08198	SIDESTAND LEG	1
30	90-08250	CUSTOM SHOULDER BOLT HEX FLANGE STAR DRIVE M10X1.25 T50	1
36	26-08313	SIDESTAND MOUNT	1

31	90-08289	SOCKET COUNTERSUNK HEAD SCREW STAR DRIVE ISO 14581 M8X30-8.8 ZM-F-01 ZM-L-02	2
32	90-08176	HEX FLANGE BOLT STAR DRIVE PER ZM 88-08813 M8X60 10.9 ZM-F-01 ZM-L-02	4
33	26-08471	LEFT SIDE DOUBLER ASSY	1
34	90-08260	HEX FLANGE BOLT STAR DRIVE PER ZM 88-08813 M8X30 8.8 ZM-F-01 ZM-L-02	4
35	90-08127	PLAIN BEARING SWINGARM PIVOT	2
36	*Not Applicable to this Bike Model*		
37	45-02413	HALL SENSOR SIDESTAND SWITCH	1
38	90-07278	HEXAGON SOCKET THIN HEAD CAP SCREW DIN 7984 M4X10-8.8 ZM-F-01 ZM-L-02	2

ZEV0072 - Frame - Right

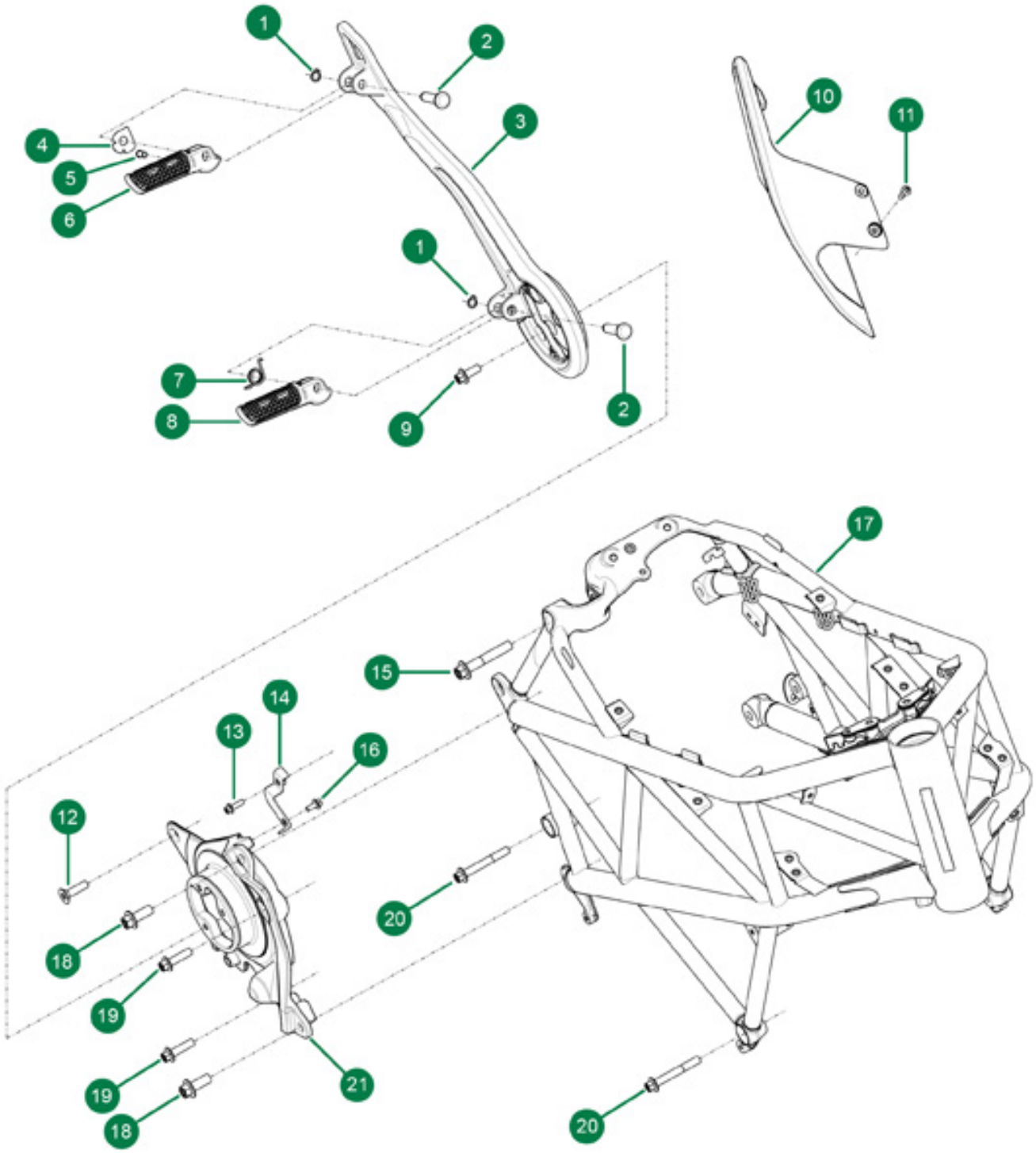

ZEV0072 - Frame - Right

Callout	Part Number	Part Name	Qty. per Motorcycle
1	90-02879	RETAINING RING 9MM SHAFT DIN 471	4
2	90-02725	CLEVIS PIN CUSTOM 10MM X 45L	4
3	27-08111	REAR SET RIGHT	1
4	20-04279	FOOTPEG DETENT PLATE	2
5	20-05404	FOOTPEG DETENT BALL MECHANISM	2
6	27-08038	PASSENGER FOOTPEG RIGHT SIDE	1
7	20-02727	TORSION SPRING, .678 OD .078 WIRE, CCW	2
8	27-08036	RIDER FOOTPEG RIGHT SIDE STREET	1
9	90-08125	HEX FLANGE BOLT STAR DRIVE PER ZM 88-08813 M8X20 10.9 ZM-F-01 ZM-L-02	7
10	27-08079	GRAB HANDLE LH	1
11	90-08264	STAR DRIVE BUTTON HEAD SCREW M6X25-8.8, ISO 7380, ISO 10664, ZM-F-01 ZM-L-02	6
12	90-08289	SOCKET COUNTERSUNK HEAD SCREW STAR DRIVE ISO 14581 M8X30-8.8 ZM-F-01 ZM-L-02	2
13	90-08183	HEX FLANGE BOLT STAR DRIVE PER ZM 88-08813 M5X16 8.8 ZM-F-01 ZM-L-02	15
14	27-08108	REAR BRAKE RESERVOIR MOUNT BRACKET	1
15	90-08142	HEX FLANGE BOLT STAR DRIVE PER ZM 88-08813 M10X60 8.8 ZM-F-01 ZM-L-02	1
16	90-08123	HEX FLANGE BOLT STAR DRIVE PER ZM 88-08813 M5X12 8.8 ZM-F-01 ZM-L-02	9
17	26-08373	MAIN FRAME NOTE: Motorcycle VIN#, Case#, or Claim# must be provided when ordering.	1
18	90-08126	HEX FLANGE BOLT STAR DRIVE PER ZM 88-08813 M10X25 8.8 ZM-F-01 ZM-L-02	3
19	90-08260	HEX FLANGE BOLT STAR DRIVE PER ZM 88-08813 M8X30 8.8 ZM-F-01 ZM-L-02	4
20	90-08176	HEX FLANGE BOLT STAR DRIVE PER ZM 88-08813 M8X60 10.9 ZM-F-01 ZM-L-02	4
21	26-08472	RIGHT SIDE DOUBLER ASSY	1

ZEV0073 - Motor

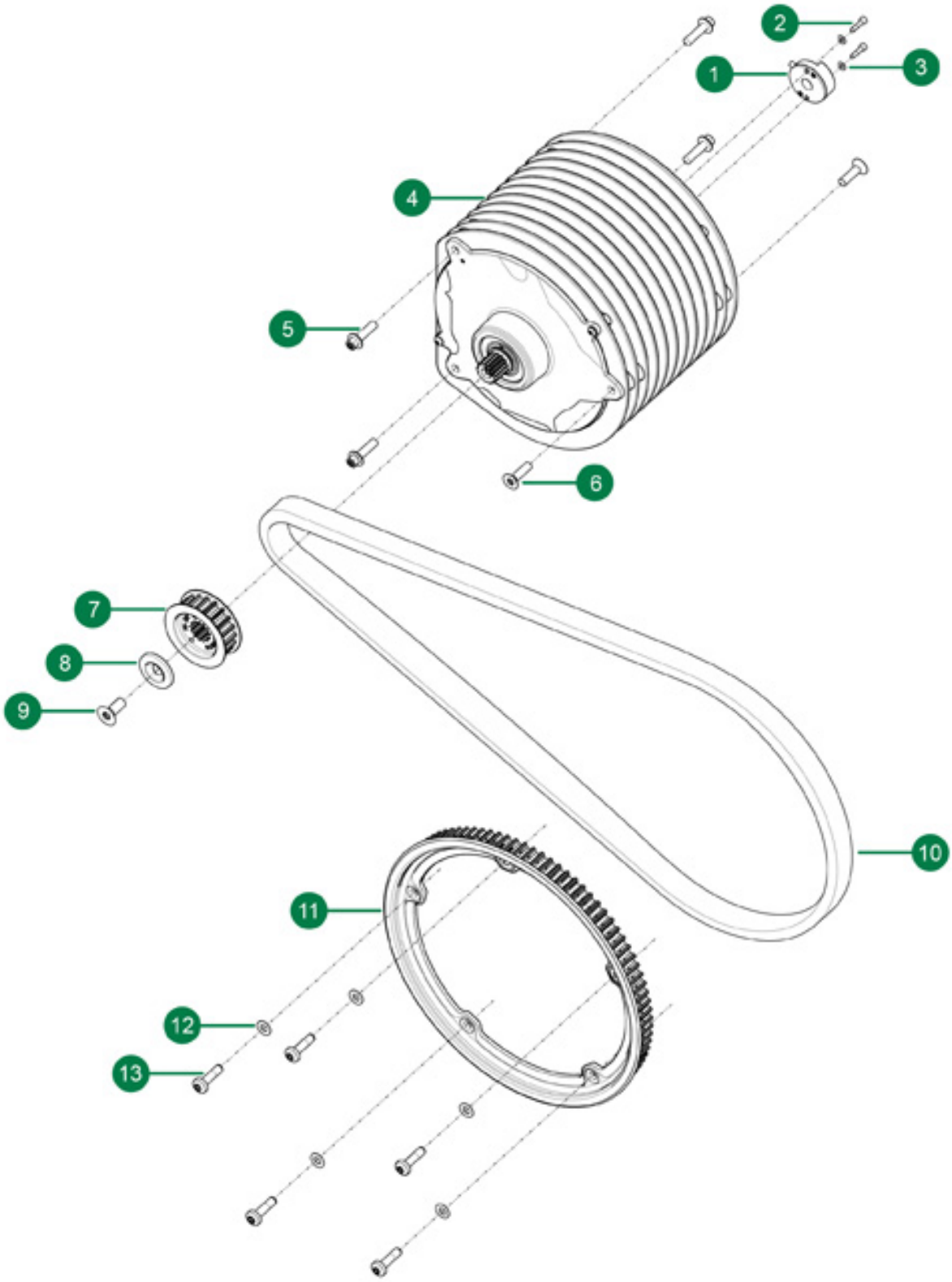

ZEV0073 - Motor

Callout	Part Number	Part Name	Qty. per Motorcycle
1	30-08241	RM44AC ENCODER MODULE ZMC SPEC	1
2	90-02512	HEXAGON SOCKET HEAD CAP SCREW ISO 4762 M4X16-8.8 ZM-F-01	2
3	90-02102	WASHER ISO 7089 4-200HV ZM-F-01	17
4	30-08159	ZF75-10 MOTOR NOTE: Motorcycle VIN#, Case#, or Claim# must be provided when ordering.	1
5	90-08260	HEX FLANGE BOLT STAR DRIVE PER ZM 88-08813 M8X30 8.8 ZM-F-01 ZM-L-02	4
6	90-08289	SOCKET COUNTERSUNK HEAD SCREW STAR DRIVE ISO 14581 M8X30-8.8 ZM-F-01 ZM-L-02	2
7	30-08210	MOTOR SPROCKET 20T 20MM BELT ASSEMBLED	1
8	20-05453	LOW PROFILE BELT SPROCKET MOTOR SHAFT TOPHAT	1
9	90-08108	HEXALOBULAR SOCKET COUNTERSUNK HEAD SCREW ISO 14581 M10X25-10.9 ZM-F-01 REV 03 NOTE: Motor sprocket bolt	1
10	30-08226	BELT 151T 11MM PITCH 20MM WIDE	1
11	30-08224	90T REAR SPROCKET 20MM WIDE COATED	1
12	90-02104	WASHER ISO 7089 -8-200 HV ZM-F-01	8
13	90-08053	HEXALOBULAR SOCKET PAN HEAD ISO 14583 M8X30-10.9 ZM-F-01 ZM-L-02	5

ZEV0074 - Electrical

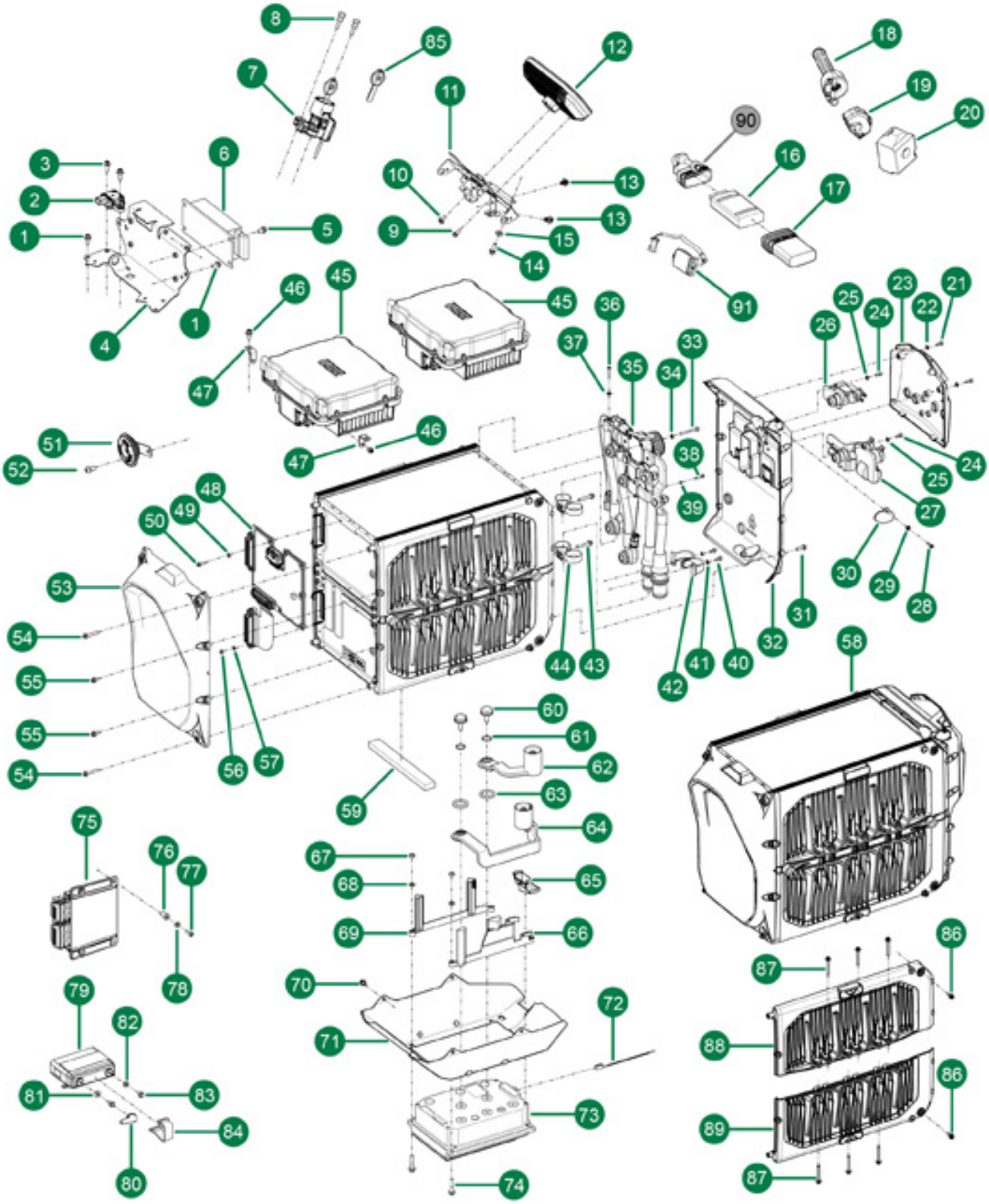

ZEV0074 - Electrical

Callout	Part Number	Part Name	Qty. per Motorcycle
1	90-08295	HEX FLANGE BOLT STAR DRIVE PER ZM 88-08813 M6X12 8.8 ZM-F-11 ZM-L-02	7
2	25-08120	BOSCH IMU MM7.10	1
3	90-08124	HEX FLANGE BOLT STAR DRIVE PER ZM 88-08813 M6X16 8.8 ZM-F-01 ZM-L-02	3
4	26-08265	MULTI MOUNT	1
5	90-08295	HEX FLANGE BOLT STAR DRIVE PER ZM 88-08813 M6X12 8.8 ZM-F-11 ZM-L-02	7
6	60-04015	DC-DC CONV SEVCON 622-11202 NON-EMC	1
7	27-08133	ZADI IMMOBILIZER MAIN SWITCH KEYED LOCKS AND OVERMOLDED KEYS SET	1
8	90-08182	M8X30MM BREAK AWAY SECURITY HEX BOLT	2
9	90-08123	HEX FLANGE BOLT STAR DRIVE PER ZM 88-08813 M5X12 8.8 ZM-F-01 ZM-L-02	9
10	90-08157	SHOULDER BOLT STAR DRIVE CUSTOM M5X12 ZM-F-11	22
11	27-08081	DASH MOUNT BRACKET	1
12	45-08262	DASH TFT	1
13	20-02875	UMBRELLA PUSH MT 6.3MM DIA X 7.0MM PNL THKNS	3
14	90-08124	HEX FLANGE BOLT STAR DRIVE PER ZM 88-08813 M6X16 8.8 ZM-F-01 ZM-L-02	3
15	90-02044	TOOTHED LOCK WASHER WITH EXTERNAL TEETH DIN 6797 A M6-B85 ZM-F-01	1
16	45-08173	CELLULAR CONNECTIVITY MODULE NOTE: Motorcycle VIN#, Case#, or Claim# must be provided when ordering.	1
17	45-08207	BOOT CONNECTIVITY MODULE BOTTOM NOTE: When replacing 45-08207, also order PN: 20-04417 CABLE TIE Qty:2.	1
18	45-08039	THROTTLE BITRON HALL EFFECT PCB NOTE: Supersedes 27-08000	1
19	27-08093	SWITCHGEAR RIGHT CRUISE KILL RUN	1
20	27-08127	HEADLIGHT TURN SIGNAL MODE SWITCH	1
21	90-08175	STAR DRIVE SOCKET HEAD CAP SCREW ISO 14579 M4X10 8.8 ZM-F-01	6
22	90-02102	WASHER ISO 7089 4-200HV ZM-F-01	17
23	46-08175	BATTERY CASE REAR PANEL COVER	1
24	90-08175	STAR DRIVE SOCKET HEAD CAP SCREW ISO 14579 M4X10 8.8 ZM-F-01	6
25	90-02102	WASHER ISO 7089 4-200HV ZM-F-01	17
26	45-08175	ASSY BUS BAR POWER ACCESSORY PANEL NEG	1

27	45-08250	ASSY BUS BAR POWER ACCESSORY PANEL POS	1
28	90-08009	HEXAGON SOCKET HEAD CAP SCREW ISO 4762 M3X8-8.8 ZM-F-01 ZM-L-02	1
29	90-02480	WASHER ISO 7089 3-200HV ZM-F-01	4
30	46-08221	COVER LOW POWER FUSE	1
31	90-08183	HEX FLANGE BOLT STAR DRIVE PER ZM 88-08813 M5X16 8.8 ZM-F-01 ZM-L-02	15
32	46-08159	BATTERY CASE REAR	1
33	90-08137	STAR DRIVE SOCKET HEAD CAP SCREW ISO 14579 M4X40 8.8 ZM-F-01	2
34	90-02102	WASHER ISO 7089 4-200HV ZM-F-01	17
35	12-08163	POWER BUS HARDWARE SERVICE ASSEMBLY	1
36	90-08192	STAR DRIVE SOCKET HEAD CAP SCREW ISO 14579 M4X16 8.8 ZM-F-01	12
37	90-02102	WASHER ISO 7089 4-200HV ZM-F-01	17
38	90-08212	HEXAGON SOCKET HEAD CAP SCREW ISO 4762 M3X16-8.8 ZM-F-01 REV 03 ZM-L-02 REV 01	3
39	90-02480	WASHER ISO 7089 3-200HV ZM-F-01	4
40	90-08175	STAR DRIVE SOCKET HEAD CAP SCREW ISO 14579 M4X10 8.8 ZM-F-01	6
41	90-02102	WASHER ISO 7089 4-200HV ZM-F-01	17
42	46-08190	CLAMP BATTERY POWER OUTPUT	1
43	90-08174	HEX FLANGE BOLT STAR DRIVE PER ZM 88-08813 M5X30 8.8 ZM-F-01 ZM-L-02	6
44	20-07512	HELLERMANNYTON DCT90HIRC2 DUAL CABLE TIE WITH MOUNT HOLE 6MM	2
45	40-08114	3KW ONBOARD CHARGER NOTE: Motorcycle VIN#, Case#, or Claim# must be provided when ordering.	2
46	90-08123	HEX FLANGE BOLT STAR DRIVE PER ZM 88-08813 M5X12 8.8 ZM-F-01 ZM-L-02	9
47	26-08317	MOUNT BRACKET	4
48	12-08142	ZERO SR/F BMS LPLT REPLACEMENT KIT	1
48	40-08201	ASSY BMS POTTED GEN 5 STEP G NOTE: Motorcycle VIN#, Case#, or Claim# must be provided when ordering. NOTE: Please order in combination with 12-08142.	1
49	90-02102	WASHER ISO 7089 4-200HV ZM-F-01	17
50	90-08192	STAR DRIVE SOCKET HEAD CAP SCREW ISO 14579 M4X16 8.8 ZM-F-01	12
51	45-08235	HORN	1
52	90-08146	STAR DRIVE BUTTON HEAD SCREW M8X16-10.9, ISO 7380, ISO 10664, ZM-F-01 REV 03 ZM-L-02 REV 01	1
53	46-08241	BATTERY CASE FRONT	1
54	90-08174	HEX FLANGE BOLT STAR DRIVE PER ZM 88-08813 M5X30 8.8 ZM-F-01 ZM-L-02	6

55	90-08280	HEX FLANGE BOLT STAR DRIVE PER ZM 88-08813 M5X10 8.8 ZM-F-01 ZM-L-02	16
56	90-02052	PREVAILING TORQUE TYPE NUT DIN 985 M4-08 ZM-F-01	2
57	90-02102	WASHER ISO 7089 4-200HV ZM-F-01	17
58	46-08160	ASSEMBLY BATTERY MONOLITH FST NOTE: Motorcycle VIN#, Case#, or Claim# must be provided when ordering.	1
59	20-03065	PORON FOAM 4701-50 15 LB/FT^3 SINGLE SIDED ADHESIVE 1IN WIDE 1/2IN THICK	220
60	12-08164	SR/F/S CONTROLLER SERVICE ASSEMBLY	1
61	12-08164	SR/F/S CONTROLLER SERVICE ASSEMBLY	1
62	30-08227	CONTROLLER BUS BAR POSITIVE	1
63	12-08164	SR/F/S CONTROLLER SERVICE ASSEMBLY	1
64	30-08228	CONTROLLER BUS BAR NEGATIVE	1
65	30-08260	SUPPORT CONTROLLER BUS	1
66	26-08321	CONTROLLER ANTI-CRUSH BAR - LEFT	1
67	90-08171	HEX FLANGE BOLT STAR DRIVE PER ZM 88-08813 M6X30 8.8 ZM-F-01 ZM-L-02	4
68	90-02103	WASHER ISO 7089 6-200HV ZM-F-01	7
69	26-08322	CONTROLLER ANTI-CRUSH BAR - RIGHT	1
70	90-08209	HEX FLANGE BOLT STAR DRIVE PER ZM 88-08813 M5X8 8.8 ZM-F-01 ZM-L-02	7
71	26-08203	CONTROLLER CARRIER	1
72	12-08164	SR/F/S CONTROLLER SERVICE ASSEMBLY	1
73	30-08160	CONTROLLER R SME WITH HEATSINK NOTE: Motorcycle VIN#, Case#, or Claim# must be provided when ordering.	1
74	90-02054	PREVAILING TORQUE TYPE NUT DIN 985 M6-08 ZM-F-01	6
75	40-08155	MBB PDU POTTED GEN 3 STEP C NOTE: Motorcycle VIN#, Case#, or Claim# must be provided when ordering.	1
76	90-03037	WELL NUT M5X0.8 GRIP 0.89-5.89	4
77	90-07256	HEXAGON SOCKET BUTTON HEAD CAP SCREW ISO 7380 M5X20-8.8 ZM-F-11	4
78	90-04085	WASHER M5 X 11 X 1 NYLON 6/6 BLACK	6
79	46-08245	12V SYSTEM BATTERY WITH HEATER	1
80	90-08300	BOOT, MS25171-2S BRICK RED	1
81	90-02105	WASHER ISO 7093-1 6-200 HV ZM-F-01	3
82	90-02103	WASHER ISO 7089 6-200HV ZM-F-01	7
83	90-08255	HEXAGON FLANGE BOLT DIN 6921 M6X8 8.8 ZM-F-01	2
84	26-08324	12V BATTERY STRAP	1
85	27-08205	FST BLANK KEY	2
86	90-08123	HEX FLANGE BOLT STAR DRIVE PER ZM 88-08813 M5X12 8.8 ZM-F-01 ZM-L-02	9
87	90-08221	HEX FLANGE BOLT STAR DRIVE PER ZM 88-08813 M5X40 8.8 ZM-F-01 ZM-L-02	12

88	46-08154	BATTERY SIDE PLATE UL/LR	2
89	46-08153	BATTERY SIDE PLATE UR/LL	2
90	*Not Applicable to this Bike Model*		
91	40-08178	POWERHUB USB CONNECTOR	1

ZEV0075 - Lighting

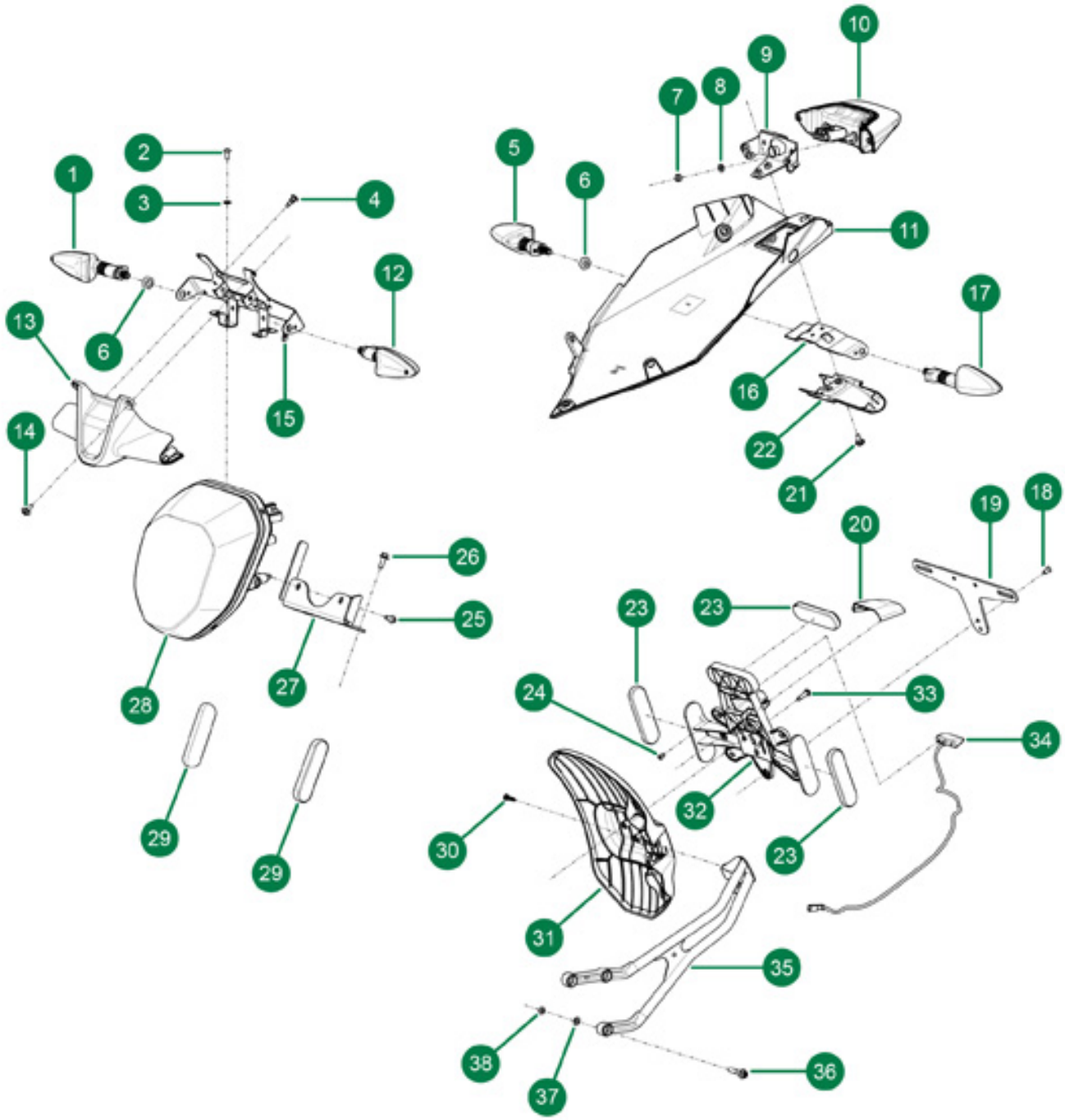

ZEV0075 - Lighting

Callout	Part Number	Part Name	Qty. per Motorcycle
1	65-03462	TURN SIGNAL FR-RH RR-LH	2
2	90-08123	HEX FLANGE BOLT STAR DRIVE PER ZM 88-08813 M5X12 8.8 ZM-F-01 ZM-L-02	9
3	90-02101	WASHER ISO 7089 5-200HV ZM-F-01	9
4	20-03066	RIVET PUSH PUSH NYLON M6	2
5	65-03463	TURN SIGNAL FR-LH RR-RH	2
6	90-02072	HEXAGON THIN NUT DIN 439-B M10 1.5-04 ZM-F-01	2
7	90-02054	PREVAILING TORQUE TYPE NUT DIN 985 M6-08 ZM-F-01	6
8	90-02103	WASHER ISO 7089 6-200HV ZM-F-01	7
9	26-08325	TAILLIGHT BRACKET	1
10	65-08023	TAIL LIGHT	1
11	24-08427	TAIL TRUNK PAN	1
12	65-03463	TURN SIGNAL FR-LH RR-RH	2
13	24-08395	DASH COVER	1
14	90-08157	SHOULDER BOLT STAR DRIVE CUSTOM M5X12 ZM-F-11	22
15	27-08081	DASH MOUNT BRACKET	1
16	26-08341	TURN SIGNAL BRACKET	1
17	65-03462	TURN SIGNAL FR-RH RR-LH	2
18	90-08215	STAR DRIVE SOCKET COUNTERSUNK HEAD SCREW ANSI B 18.6.7M ISO 14582 M5X10-8.8 ZM-F-01 ZM-L-02	3
19	26-08363	LICENSE PLATE BRACKET EU SHORT	1
20	24-08413	LICENSE PLATE LIGHT HOOD	1
21	90-08157	SHOULDER BOLT STAR DRIVE CUSTOM M5X12 ZM-F-11	22
22	24-08435	TURN SIGNAL HOLDER REAR	1
23	20-03487	REFLECTOR, OVAL, ADH BACK, RED ECIE	3
24	90-08093	HEXAGON SOCKET HEAD CAP SCREW ISO 4762 M4X6-8.8 ZM-F-01 ZM-L-02	2
25	90-08123	HEX FLANGE BOLT STAR DRIVE PER ZM 88-08813 M5X12 8.8 ZM-F-01 ZM-L-02	9
26	90-08124	HEX FLANGE BOLT STAR DRIVE PER ZM 88-08813 M6X16 8.8 ZM-F-01 ZM-L-02	3
27	26-08327	HEADLIGHT SUPPORT BRACKET	1
28	65-08019	HEADLIGHT ASSEMBLY	1
29	20-03128	REFLECTOR OVAL ADH BACK FORK MOUNT AMBER	2
30	90-08123	HEX FLANGE BOLT STAR DRIVE PER ZM 88-08813 M5X12 8.8 ZM-F-01 ZM-L-02	9
31	24-08531	REAR OUTER FENDER	1
32	24-08528	LICENSE PLATE HOLDER HORIZONTAL REFLECTOR	1
33	90-08163	STAR DRIVE BUTTON HEAD SCREW M5X20-8.8, ISO 7380, ISO 10664, ZM-F-01 REV 03 ZM-L-02	1

34	65-08022	LICENSE PLATE LIGHT	1
35	26-08379	REAR OUTER FENDER ARM STEEL	1
36	90-08166	STAR DRIVE SOCKET HEAD CAP SCREW ISO 14579 M8X25 8.8 ZM-F-21 ZM-L-02	9
37	90-03236	PREVAILING TORQUE TYPE NUT DIN 985 M8-10 ZM-F-01	3
38	90-02104	WASHER ISO 7089 -8-200 HV ZM-F-01	8